Polymak®

PM-CSSGL-3.7V Cordless Single Suction Glass Lifter

Pad Size:	200mm
Battery Cap:	3.7V/1.2Ah
Charging Time:	2 Hour
Vertical suction:	140KGS

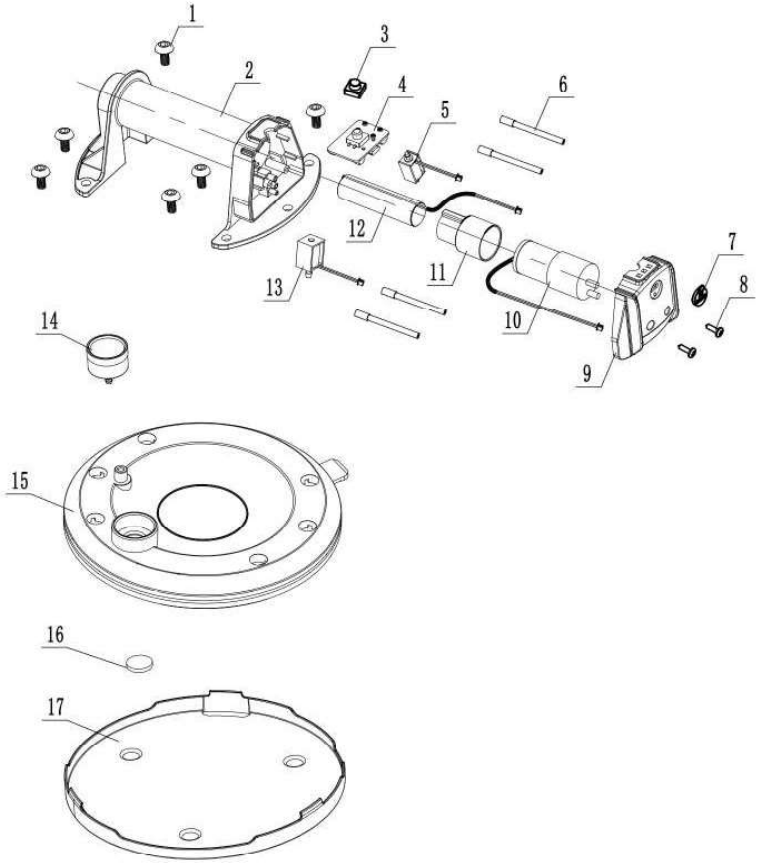

Polymak®

PM-CSSGL-3.7V SPARE PARTS LIST

No	Parts Name	Pcs	Seri No	INR
1	M6*10 screw	6	5090103371	
2	Handle	1	5010400511	
3	Button cap	1	5040100621	
4	Mainboard	1	5160100511	
5	Two-way valve	1	5160800021	
6	Silicone tube(ϕ2-ϕ3)	4	5040100631	
7	Dust plug	1	5040300191	
8	ST2.9*14 screw	2	5090102061	
9	Handle cover	1	5010400521	
10	Vacuum pump	1	5170300091	
11	Connecting sleeve	1	5010400531	
12	Battery	1	5180100241	
13	Exhaust valve	1	5160800031	
14	Pressure gauge	1	5060700511	
15	Suction cup rubber	1	5040300241	
16	Dustproof wool pad	1	5090600071	
17	Bottom cover	1	5010400101	

No	Parts Name	Pcs	Seri No	INR