Polymak®

## PM-CDD-16VB-2BL

BRUSHLESS DRILL DRIVER

| | |
|---|---|
| Voltage: | 16V |
| No Load Speed: | 0-400/0-1400rpm |
| Battery Capacity: | 2.0Ah |
| Torque Max.: | 40N.m |

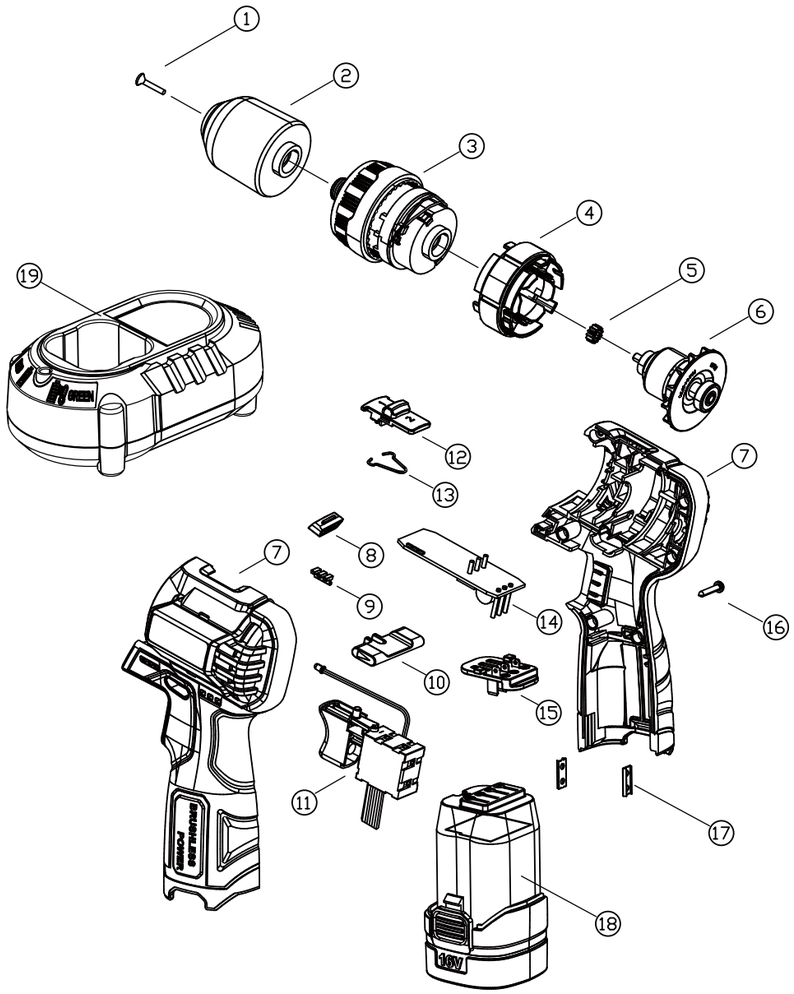


Polymak®

# PM-CDD-16VB-2BL SPARE PARTS LIST

| No | Parts Name | Pcs | Seri No | INR |
|---|---|---|---|---|
| 1 | M6*21 screw | 1 | | |
| 2 | Drill Chuck | 1 | | |
| 3 | Gear box | 1 | | |
| 4 | Rotor | 1 | | |
| 5 | Motor gear | 1 | | |
| 6 | Stator | 1 | | |
| 7 | Housing | 1 | | |
| 8 | Led light lamp | 1 | | |
| 9 | Light guide | 1 | | |
| 10 | Forward/reverse shift | 1 | | |
| 11 | Switch | 1 | | |
| 12 | Shift block | 1 | | |
| 13 | Shift block wire | 1 | | |
| 14 | control board | 1 | | |
| 15 | Pin | 1 | | |
| 16 | ST3*14 screws | 8 | | |
| 17 | Casing snap | 2 | | |
| 18 | Battery pack | 2 | | |
| 19 | Charger | 1 | | |

| No | Parts Name | Pcs | Seri No | INR |
|---|---|---|---|---|
| | | | | |